Without human intervention, achieved threading wire quickly, you have more time to do something else important.

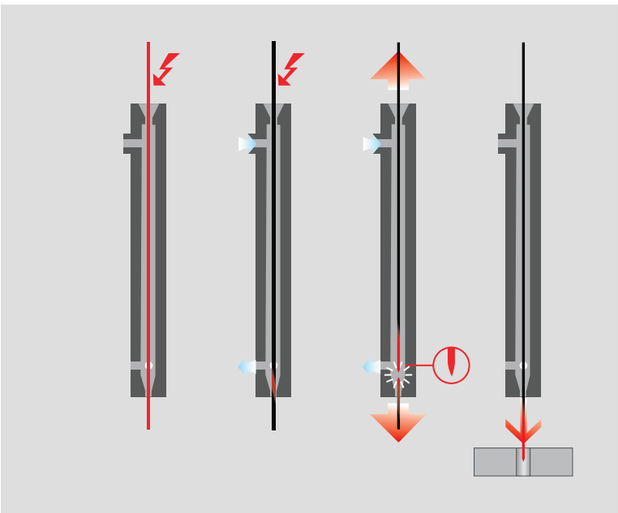

Fusing cut wire system
It makes wire heating,strength then cut wire, the head of brass wire becomes sharpness, which makes the wire thread into small hole with narrow gap easily. Make sure the success rate of auto wire thread

Wire sending-receiving system-The system open the electrode sending-receiving system, when the threading and wire break restore not in a good condition

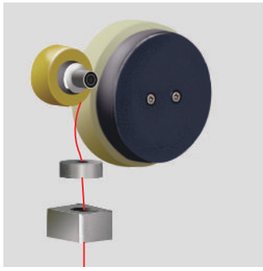

The system stops threading when the wire is bended to touching the sensor

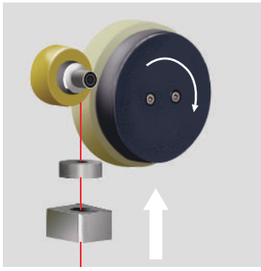

The system opens return functions automatically.

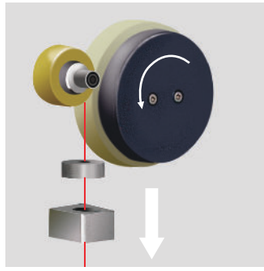

The system re-sending wire when the wire is straight
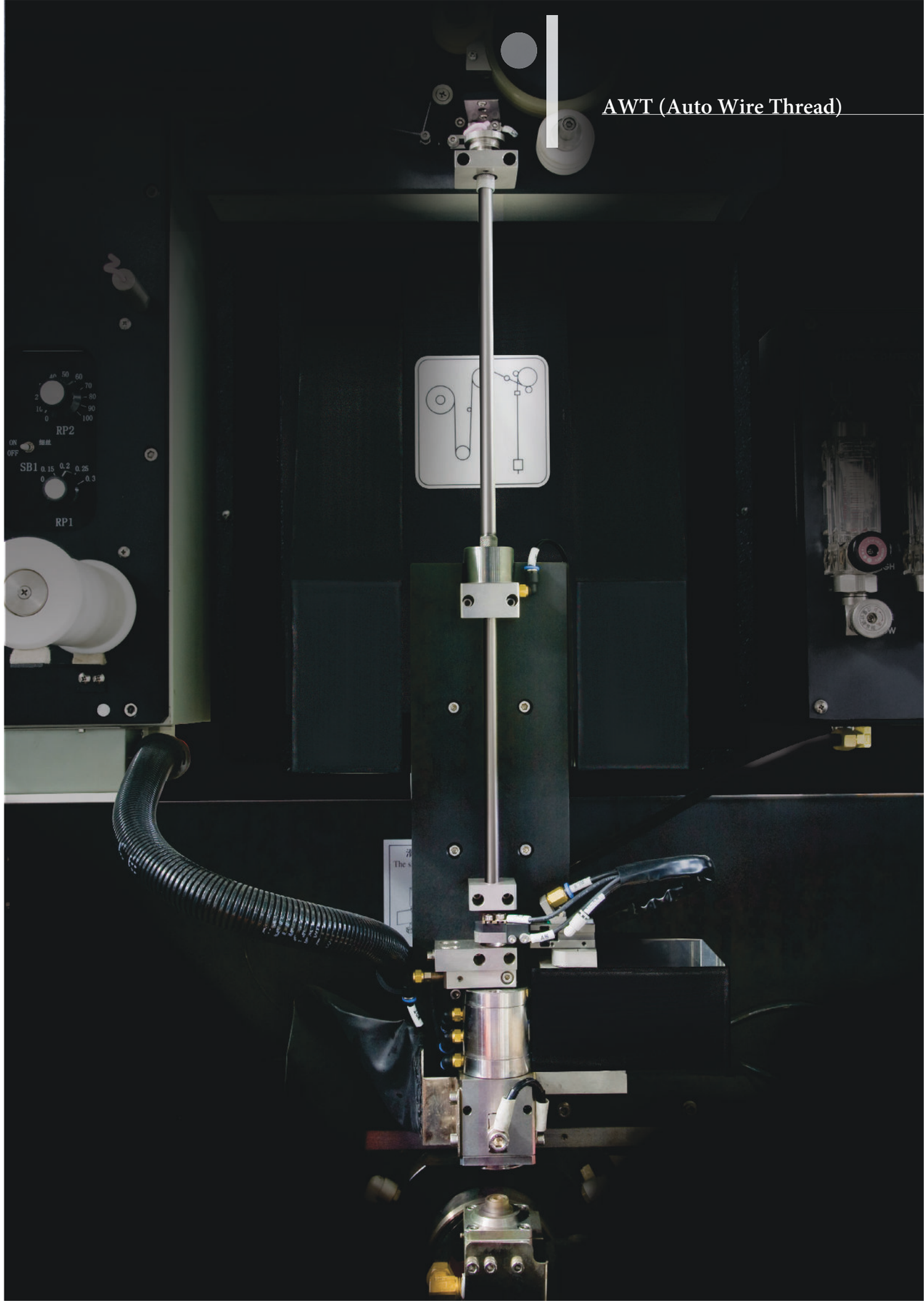
* Option.